CONTENTS

INTRODUCTION

I – GENERALITY
- I.A – SYMBOLS
- I.B – GENERAL INFORMATIONS

II – SAFETY
- II.A – LABELS
- II.B – RECOMMENDATIONS

III – OPERATION
- III.A – CHECKLIST
- III.B – TECHNICAL DATA
- III.C – HITCHING
- III.D – PREPARATION FOR WORK
- III.E – USAGE
- III.F – UNHITCHING
- III.G – TROUBLESHOOTING

IV – STORAGE

V – MAINTENANCE

VI – TOXICOLOGICAL INFORMATIONS

VII – DISPOSAL & RECYCLING

VIII – WARRANTY
- 8.A – TERMS & CONDITIONS
- 8.B – WARRANTY REGISTRATION

INDEX

ANNEX
- A1 – EU DECLARATION OF CONFORMITY
- A2 – SOVEMA PRODUCT RANGE
- A3 – SPARE PARTS CATALOGUE

I - GENERALITY

The manual is the translation of the original manual in italian language (official language).
If you should notice any unclear points, omissions, etc., feel free to contact SOVEMA.

I.A - SYMBOLS

These following safety pictograms appear throughout the manual.
Remember their meaning.

READ CAREFULLY!

YOUR SAFETY IS IN DANGER!

USE PERSONAL PROTECTIVE EQUIPMENT!
(safety shoes, protective gloves, helmet, goggles, overalls and FFP1 mask)

NOTE **IMPORTANT INFORMATION!**

I.B - GENERAL INFORMATIONS

All implements with moving parts are potentially hazardous. The manufacturer has designed the implement to be used with all the guards properly fitted.
The purpose of this manual is to provide important informations on technical specifications, safety, operating, maintenance and troubleshooting of the implement, so you can use it in a proper, safe and efficient way. Compliance with this manual contributes to avoid risks, reducing repair costs and downtime and increasing the reliability and lifetime of the implement.
This manual have been filled in by our decennial experience. Following the instructions, you should be able to develop operating procedures suitable to your needs.
The images contained in this manual are indicative and may differ from reality, their purpose is illustrative only.
Illustrations used in this manual may vary slightly in some details compared to your implement.
Even if some illustrations in this manual could show the implement with safety guards removed for a better understanding, never operate in these conditions.
In this manual references to “forward”, “right” and “left” are referred as indicated in image below, with the implement connected to the tractor on its rear three-point hitch.

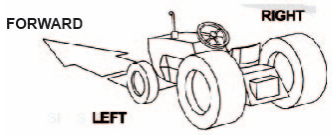

FIELD OF USE : The implement must be used for agricultural activities. The operator, on the basis of working conditions always available, must pay particular attention to the performance limits of the implement. At the first sign of overloading, the implement must be stopped immediately.
This manual is protected under copyright law. Any reproduction and distribution, partial or complete, of document is not permitted unless expressly permitted in writing.

BEFORE OPERATING THE IMLEMENT ALL SAFETY GUARDS MUST BE MOUNTED!

NOTE **KEEP THE MANUAL IN A SAFE AREA FOR ALL OF LIFE OF THE IMPLEMENT. IF IT IS PARTIALLY RUINED OR LOST YOU HAVE TO REQUEST A NEW ONE CONTACTING A DEALER SOVEMA OR SOVEMA ITSELF.**

II – SAFETY

This section is very important because even if the implement is well-designed and even if safety guards are present on the implement, residual risks remain and the operator have to know them in order to avoid injuries.

II.A - LABELS

Safety pictograms (hereafter decals), placed in a visible position on the implement contain important safety warnings. To prevent injuries the operator have to read and understand them carefully and keep them clean and visible.
Check that all the decals are on the implement and in a good condition. If not, do not use the implement without decals and refer to the dealer immediately to get them.
The meaning of decals that are on the implement is the following:

1 2 3 4

1 Before starting operations, read carefully the instruction manual

2 Before performing the maintenance, lower the implement to the ground, turn off the engine, disengage the PTO and read the operator manual

3 People, animals or objects must never be transported on wrong place of the tractor or of the implement, fatal injuries may occur

4 Do not stand behind the tractor during operations

5 Before connecting the implement to the PTO, read carefully the operation & maintenance manual

6 Hazard of entanglement in PTO drive shaft

7 Keep away from the PTO drive shaft in operation: the contact can cause death

8

9 10

11

8 Hands and feet can be injured by moving knives/hammers. Keep away from the implement

9 Your feet can be injured. Keep away from the implement

10 Your hands can be injured. Do not remove safety guards and keep away from moving parts

11 Your hands can be injured. Do not remove the cover and keep away from moving parts

The implement is designed for tractors with 540 rpm PTO

The implement is designed for tractors with 1000 rpm PTO

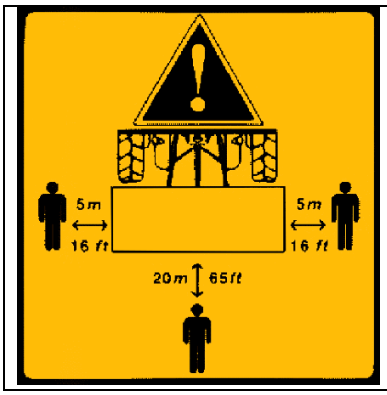

During working operations all bystanders must stay beyond the shown distances from the implement

Do not step or stand on this surface

In the following figure it is indicated the location of decals described above.

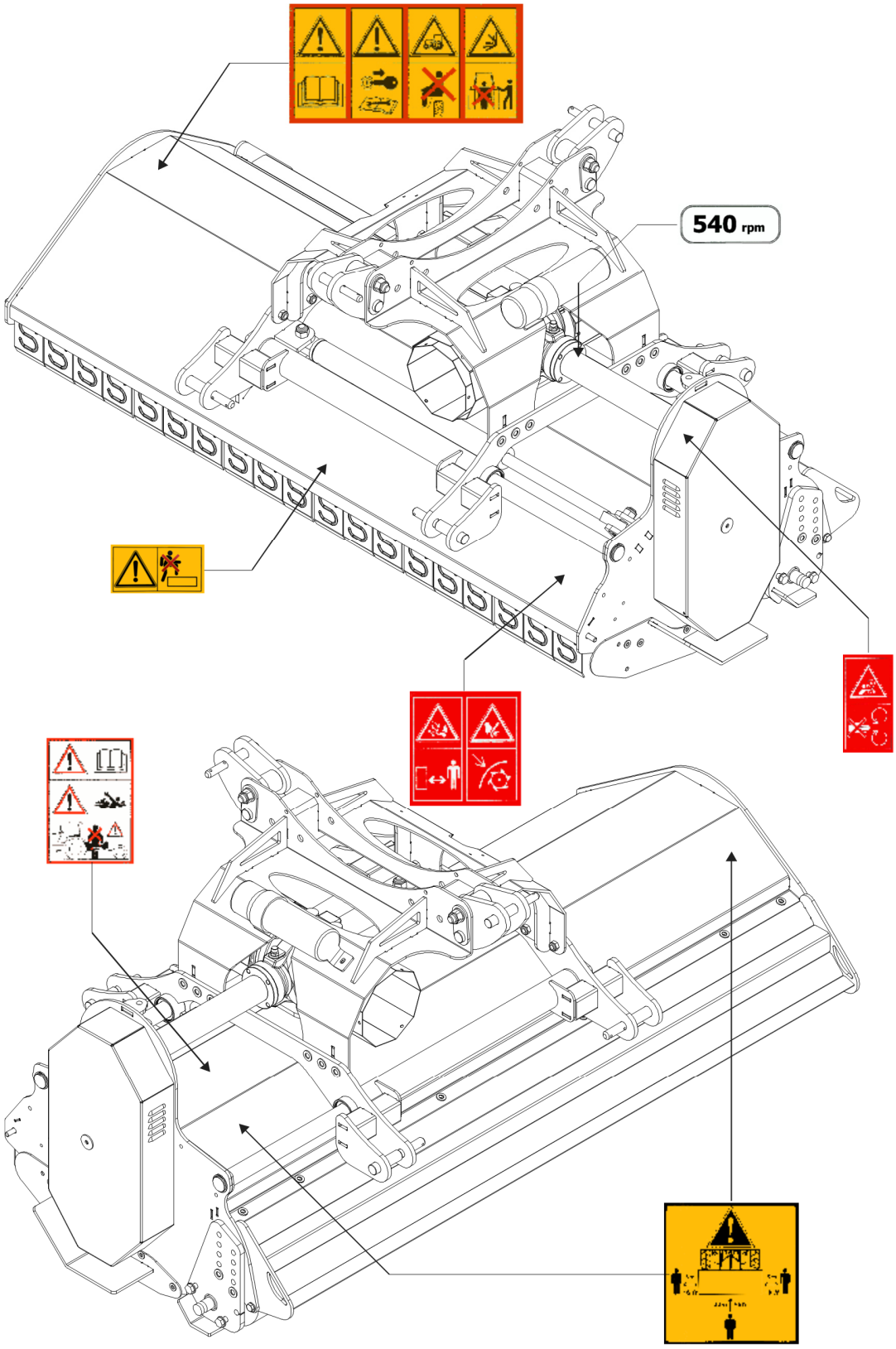

II.B - RECOMMENDATIONS

Before using the implement you must be sure to know the main safety recommendations; many accidents are caused by not observing these simple rules.
SOVEMA Srl declines to the full extent allowed by the applicable laws all liability and responsibility for any damages of any kind resulting from the non-observance of the rules and guidelines expressed in this manual

PRE-OPERATIONAL AND OPERATIONAL SAFETY RULES

⚠	This manual must be always available and should be read and studied by any person who is authorized to work with the implement
⚠	Keep all guards and safety decals in place and in a good condition before operating the implement. Guards can be removed for maintenance or cleaning purpose only
⚠	Only operate with a tractor equipped with an approved Roll Over Protective System (ROPS) and always fasten seat belt
⚠	Operate with daylight or good artificial light only
⚠	Be sure that only trained personnel operate/maintain the tractor the implement
⚠	Personal protection equipment, including overalls, safety shoes, goggles, helmet, gloves and mask are recommended during the operations of hitching/usage/unhitching of implement
⚠	Do not leave seat until the implement is lowered to the ground, engine is completely turned off, brakes engaged, ignition key removed
⚠	Do not allow to other people to stay on wrong place of the tractor or on implement at any time
⚠	Before starting operations, make sure that the tractor PTO is set to match the PTO requirements of implement. The speed is indicated on the implement and in this manual on “III.B - TECHNICAL DATA” section
⚠	Always use the PTO drive shaft supplied by the manufacturer
⚠	Make sure that the PTO drive shaft is firmly connected to the tractor and to the implement and blocked in position
⚠	For hitching and unhitching the PTO drive shaft, please refer to the manufacturer’s instructions manual and to your tractor’s instructions manual
⚠	Hitching and unhitching of the PTO drive shaft must be performed with the tractor’s engine turned off
⚠	Keep hands, feet, long hair, loose clothing and jewelry away from moving parts
⚠	To prevent injury by thrown objects do not operate unless all personnel, livestock and pets are 20 m (65 ft) away

⚠	The rotating parts of the implement have been designed and tested for rugged use. However they can damage due to impact with heavy solid objects. Such impact can cause fragments to be thrown outward at very high speed. To reduce the possibility of serious injury, or even death, never allow the rotating parts to go to the contact with such obstacles
⚠	Stop the implement and tractor immediately upon hitting an obstacle. Turn off the engine, remove the ignition key, inspect and repair any damage before resuming operation
⚠	No repairs or adjustments should be carried out while the implement is connected to the tractor and turned on
⚠	Disengage tractor PTO and place transmission into neutral position before attempting to start tractor engine
⚠	The implement PTO can turn both at 540 rpm (default speed) and at 1000 rpm. For 1000 rpm the user must invert the position of the pulleys (see image below)

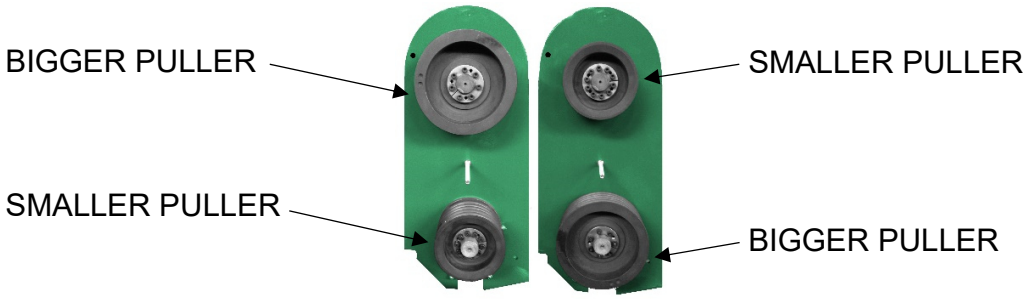

USE AFTER A LONG PERIOD OF INACTIVITY

Before using the implement after a long period of inactivity, please follow these steps:

⚠	Make sure the implement is not damaged
⚠	Check all mechanical parts. They must be in good condition and must not show signs of rust
⚠	Check wear of tools
⚠	Check that the implement does not present loss of oil from couplings or tubes
⚠	Lubricate all moving parts
⚠	Check that all safety guards are correctly positioned and assembled
⚠	Check that all safety decals are correctly positioned and assembled

ROAD TRANSPORT SAFETY

⚠	Plan route to avoid heavy traffic
⚠	Make sure that all moving parts be firmly secured
⚠	Be sure that the implement is in the raised position for transport
⚠	When you drive never drink
⚠	Pay attention to traffic when operating near or crossing roadways
⚠	Drive at low speed to avoid bouncing and loss of steering control
⚠	Before transportation, remove any dirt, soil, crop residue or other elements that might be dangerously dispersed during transport
⚠	Before transportation, pay particular attention to the integrity of the coupling pins and to the presence of their safety pins
⚠	Make sure that all moving parts be firmly secured
⚠	Make sure that the lateral movement arms be closed
⚠	In case of transport on public roads, observe the traffic code of the State where the implement is, pay particular attention to the requirements relating to the visual signalling devices, to the overall dimensions and the admitted weight

MAINTENANCE SAFETY

⚠	Good maintenance is your responsibility. Poor maintenance is an invitation to fault
⚠	Please follow these common practices: 1. keep service area clean 2. use adequate illumination for the working place 3. make sure the electric tools are properly grounded 4. make sure the service area is properly ventilated
⚠	Before performing maintenance of implement, be sure that area is level, turn off the engine, disengage the PTO, lower the machine, engage the brakes and remove the ignition key
⚠	Keep all people away from the service area while performing maintenance
⚠	Always use personal protective equipment included, besides safety shoes and protective gloves, overalls, goggles, and helmet
⚠	When replacing a mechanical part, always use original spare parts in order not to compromise the implement and your own personal safety. SOVEMA assumes no liability if the replacement of non original parts is performed
⚠	After servicing, be sure that all safety guards are re-installed properly
⚠	After servicing, make sure that all safety decals are reinstalled on the implement and in good condition
⚠	If the implement is modified from the original design, no responsibility for the manufacturer can be claimed
⚠	In case of lifting of the implement the operator have to use the lifting holes indicates in this manual on “V - MAINTENANCE” section

III – OPERATION

III.A – CHECKLIST

Before connecting the implement to the tractor, please read the following instructions:

- ⚠ Make sure that the weight and power of the tractor is suitable to the implement you want to connect. If you have any doubt, please refer to the “III.B – TECHNICAL DATA” section
- ⚠ Make sure that all safety pictograms (decals) are properly installed and clean
- ⚠ Check the oil level in the gearbox. A low oil level can damage the gears
- ⚠ Make sure that all safety guards are properly installed and in good condition

III.B - TECHNICAL DATA

The implement described in this manual is a reversible flail mower, from the **BTL** series.
The identification plate is located on right-upper part of implement frame.

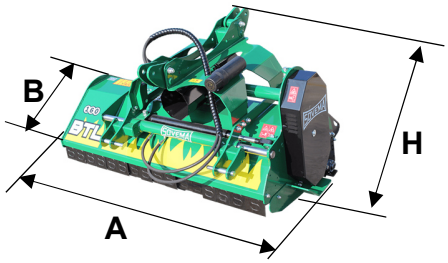

The image shown is for illustrative purpose only

MODEL	WORKING WIDTH	POWER	WEIGHT	WIDTH "A"	DEPTH "B"	HEIGHT "H"
	cm/in	hp/kw	kg/lb	cm/in	cm/in	cm/in
BTL 140	140/55"	30÷80/22÷60	540/1191	165/65"	110/43"	99/39"
BTL 160	160/63"	35÷80/26÷60	570/1257	185/73"	110/43"	99/39"
BTL 180	180/71"	40÷80/30÷60	600/1323	220/87"	110/43"	99/39"
BTL 200	200/79"	45÷80/34÷60	630/1389	256/101"	110/43"	99/39"

MODEL	PTO SPEED	ROTOR SPEED 540	ROTOR SPEED 1000	Side shift (from centre)	
	rpm	rpm	rpm	right side (cm/in)	left side (cm/in)
BTL 140	540/1000	1845	1950	81/32" 41/16"	62/24" 102/40"
BTL 160	540/1000	1845	1950	81/32" 41/16"	82/32" 122/48"
BTL 180	540/1000	1845	1950	81/32" 41/16"	102/40" 142/56"
BTL 200	540/1000	1845	1950	81/32" 41/16"	120/47" 160/63"

MODEL				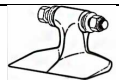	
BTL 140	48	24	24	12	24
BTL 160	48	32	32	16	32
BTL 180	56	32	32	16	32
BTL 200	80	40	40	20	40

NOISE LEVEL UNDER NO LOAD

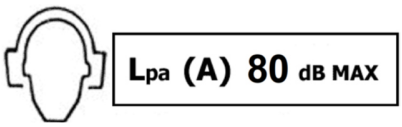

III.C HITCHING

The implement described in this manual can be connected to any kind of tractor provided of universal three-point linkage.

The characteristics of this linkage depend on the type of tractor, therefore it is necessary to setting up the tractor in order to properly connect the implement.

This operation must be carried out on a flat and firm area as it is dangerous.

Do not allow anyone to stay between tractor and implement while the engine is running

Follow these instructions:

1. Connect the tractor two lifting arms to the lower plates of the implement by using two hitch pins and two cotter keys to lock pins in place (see Fig. 1)

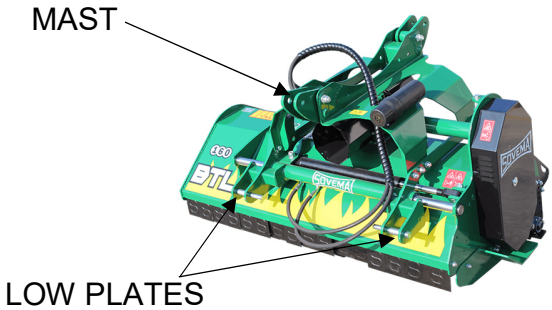

Figure 1

2. Connect the tractor top link to the mast of implement by using hitch pin and a cotter key to lock pin in place (see Fig. 1)

3. Lift up the implement off the ground

4. While remaining in the driving seat, put the tractor PTO in neutral position

5. When the PTO drive shaft has completely stopped, turn off the engine, engage the parking brake and remove the ignition key

6. Get off the tractor and place wheels in a desired working position by using the rubber bushes

7. Connect the PTO drive shaft to the implement

8. Connect the PTO drive shaft to the tractor. If the shaft is too long you have to shorten it, please refer to the instructions on the next page

9. (if present) Connect implement hydraulic hoses to the tractor distributor

10. Get on the tractor, insert the ignition key and turn on the engine

11. Lower the implement and adjust it so that it is parallel to the ground. Do this by adjusting the tractor top link (see Fig. 2). This will improve the life-span of the implement and the PTO shaft

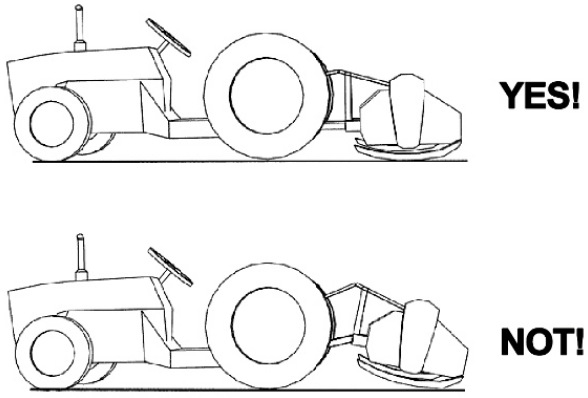

Figure 2

⚠ Always check that the tractor PTO is in neutral position before connecting the PTO drive shaft!

NOTE ON THE PTO DRIVE SHAFT

⚠ Always refer to the manufacturer's instructions manual. Read it carefully!

Shorten the PTO drive shaft

Due to the many different types of tractors, it may be necessary to shorten the PTO shaft. Listed below are some basic guidelines on performing this modification. First, determine the length that has to be removed

1) remove plastic protection on both sections

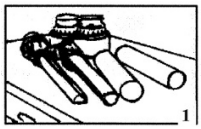

2) cut the excess length of both tubes using a saw

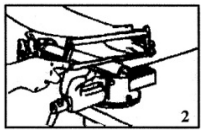

3) deburr and clean the ends of each tube

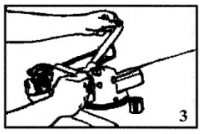

4) cut the plastic protections to the same length you have cut the tubes

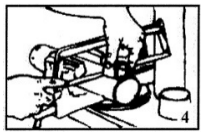

5) grease the the tube and reassembly the drive shaft

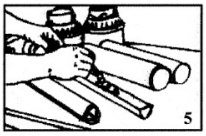

III.D - PREPARATION FOR WORK

Before the first fielding, make sure you have greased all components with the grease nipple.

Rear roller adjustment

Rear roller ment is carried out by regulating the two roller support plates as follows (see fig. 1):

- Unscrew and remove screws “a” from the roller’s plates
- Adjust the wheel as preferred
- Place screws “a” back

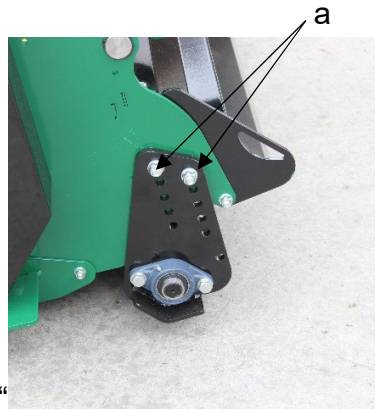

Figure 1

To get uniformity on cut, the adjustment described before (by spacers) must be the same for the four wheels of the implement

III.E - USAGE

After having completed all safety checks and made sure the implement is parallel to the ground, proceed as follows:

- raise the implement off the ground in order to let the knives/hammers start moving without touching ground to avoid damages
- keeping the implement raised, engage the tractor PTO at suggested engine's revs
- start moving the tractor forward and then gradually lower the implement

OPERATING TIPS

Proper ground speed for implement will depend upon the type of soil and its conditions. However we suggest not to exceed 10 km/h (6 mph)

Lower ground speed allows to mulch with better performance. In order to obtain a opposite result proceed more quickly

During the operation, it is always necessary to raise the implement before ma-king a turn or change of course, otherwise damages to the skids or roller supports can occur

The implement must be used only if equipped with all its components as supplied by SOVEMA (safety devices included). No components can be modified

III.F – UNHITCHING

The disconnection of the implement from the tractor must be carried out on a flat and firm surface. It's a dangerous operation, pay attention. Please read the following instructions carefully:

1. While remaining in the driving seat, put the tractor PTO in neutral position
2. When the PTO drive shaft has completely stopped, turn off the engine and engage the parking brakes
3. Remove the ignition key
4. Get off the tractor, place the support stands in a desired position by using the supplied pin and lower the implement on the ground
5. (if present) Disconnect implement hydraulic hoses from tractor distributor and place them in their holders or put the plug on each end hose
6. Remove PTO drive shaft from the tractor
7. Remove PTO drive shaft from the implement
8. Disconnect the tractor top link
9. At the end, disconnect the tractor two lower links

Always check that the tractor PTO is in neutral position before disconnecting the PTO drive shaft

III.G TROUBLESHOOTING

During the operation of implement several problems can happen:

UNUSUAL NOISES

During working, if the implement produces unusual noises, the operator must immediately stop it and follow these instructions:

- **Make sure that there are no broken/bent mechanical parts**

- **Check that the gearbox contains the correct amount of oil**
  If the oil level is too low (please see the section “V - MAINTENANCE”), the gears are not adequately lubricated and if the gearbox continues to rotate will determine a significant increase in oil temperature. This will quickly produce damages to the gears and bearings

- **Check knives/hammers conditions**
  If some of the tines are broken, bent or present excessive wear, the balance of the rotor will be compromised. During working, the rotating movement of the rotor will produce vibrations that will inevitably damage and break bearings and welded parts of the frame. In order to avoid damages, please replace all the tines at the same time with the new genuine ones supplied by SOVEMA

- **Check the lubrication and condition of the rotor support bearings**
  As a consequence of reduced lubrication, some of bearings supporting the rotor may have broken down. The rotor begins to oscillate producing excessive vibrations against the frame, producing damages to the welded parts of the frame
  Another possible cause for breaking rotor shaft bearings can be the impact with heavy objects on the ground such as stones, metallic objects, etc.
  Another possible cause for breaking rotor bearings is the improper use of the implement; especially in changes on direction and u-turns while working

- **Check tractor PTO speed**

If the tractor PTO turns at a incorrect speed the implement could vibrate much and produce noise excessively. To avoid it set up the correct revolutions per minute.

- **Check that knives are not beating the ground**
  If the knives beat the ground, they wear more quickly, so raise the implement and adjust the cutting height

WORKING ANOMALIES

If after the operation the implement failed to obtain an acceptable tillage, the operator must follow these instructions:

- **Check knives/hammers conditions**
  The knives/hammers can be worn and less effective. Please replace them. Use original tools SOVEMA only.
  During the working if the product is not mulched good, please advance more slowly

- **Check if the working height has been properly set up**
  The adjustment of the implement may be uneven. Please check that both skids are at the same height

- **Check belts condition after removing the belt cover**
  It is possible that the belts are not tight enough, thus failing to transmit enough power to the knives/hammers. The sliding can be produced by lack of tightness or by belt wear. If the belts look marginally damaged, the operator must replace them immediately. If the belts are loose, the operator must tighten them

- **Check rotor for potential clogging**
  An uneven cutting could be produced from an excessive accumulation of material on the rotor. It is possible that objects, such as clods, stones, metal parts etc., are attached to the rotor or knives/hammers prevent them works in the best condition. If it is happened this above mentioned please remove the foreign parts

- **Check advancement tractor speed**
  A less-than-adequate result can be produced by an incorrect tractor speed. The advancement speed must be set up in relation to the rotor turns, type of soil and tractor power. Advancing too quickly doesn’t allow the knives/hammers to mulch thoroughly

- **Check type of product to be mulched**
  If the product is very thick further runs will be required.
  Do not work if the product is excessively wet in order to avoid rotor clogging.

Before checking the implement in order to find the possible cause of malfunctioning, make sure the tractor PTO is disconnected, the engine is turned off, brakes are engaged, the ignition key is off the command board and the implement is completely lowered to the ground

IV - STORAGE

The implement represents an investment for the operator, so it's fundamental to spend the utmost care in order to keep it always efficient and extend his lifetime.
When you park your implement we suggest to follow these following rules:

- Fit the support legs supplied with the implement
- Rest the implement on a flat and horizontal surface
- Rest the PTO drive shaft on the hook supplied with the implement
- Lubricate all moving parts like bearings, pivots, supports and other wear points
- Lubrificate all not-painted parts
- Protect the implement with a protective sheet
- Store the implement in a closed, clean and dry place

If the implement is left unused for a long time, we suggest to follow these simple rules:

- Wash and dry the implement
- Check all moving parts. In case of excessive wear replace the parts or contact your local dealer
- Check bolts and nuts for proper tightness, in particular those that fix the knives/hammers
- Lubricate all the moving parts like bearings, pivots, supports and other wear points
- Lubricate all not-painted parts
- Protect the implement with a protective sheet

V – MAINTENANCE

The efficiency and lifetime of this implement strongly depend on the observance of its maintenance schedule. The schedule reported below is subject to change since it refers to a normal usage and does not take into consideration heavier working conditions which require a more frequent maintenance.

⚠ Disengage the PTO drive shaft before proceeding with maintenance

⚠ In order to lift implement up please use the pin of the mast and the free holes on the rear plates

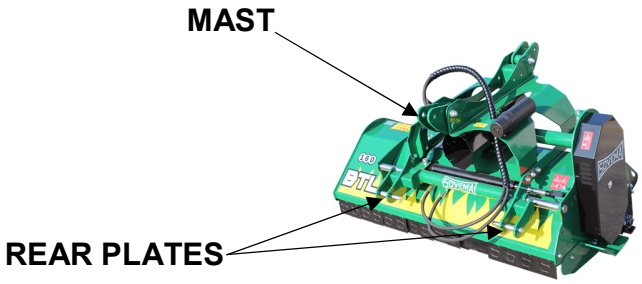

Figure 1

⚠

EVERY 10 WORKING HOURS

- Check if the bolts that fix the blades to the rotor are well tightened. Tighten as needed
- Grease the PTO drive shaft components
- Clean the end of PTO shaft with non toxic/non inflammable detergent
- Make sure that PTO shaft guard is in place and in good condition
- Using the grease nipple located on top of the rotor shaft hub (one for each shaft) and exactly under the cap present on the cover (see fig. 1), grease the bearings of the shaft it selves. to carry out this operation take out the plugs from the cover and clean the grease nipple. Use lithium-based grease with NLGI number of 2
- Clean the implement from residues of cut material

EVERY 20 WORKING HOURS

- It's recommended to grease the PTO shaft in the evening after work, because having just worked the internal components of the cardan are at a temperature that allows optimal greasing.
- Check belt tension by measuring belt tightness. Correct tightness results when belt deflection along the front side of the same, as a result of the pressure applied with the index finger to the centre of the belt length, is about 1 cm (see fig. 2).

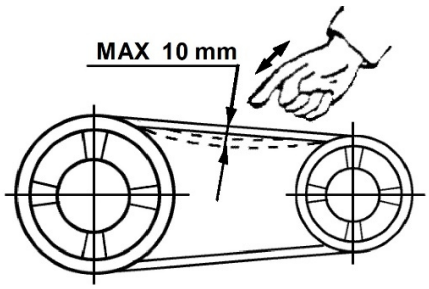

Figure 2

In case a belt adjustment is needed, proceed as follows (see fig. 3)

- Remove the belt cover
- Loose the two nuts "d"
- Rotate "a" nut counter-clockwise while holding nut "c" still
- Keep nut "b" still, rotate the tensioning screw "c" clockwise. As a result, the transmission tube will rise along with the pulley
- Make sure that the maximum flexibility of each belt is not over 1 cm when tested with one's finger
- Keep screw "c" still and rotate nut "a" until it is blocked
- Tighten nut "d"

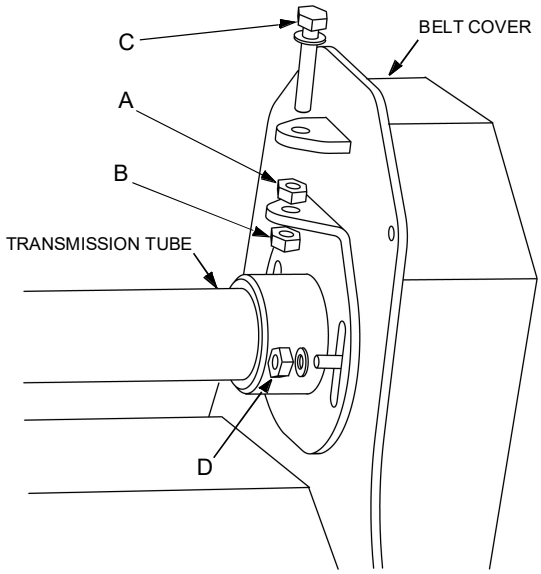

Figure 3

If the belts show signs of deterioration (even of small entity), or if the belt tension adjustment is not possible because of having reached the maximum limit of tensioning, replace the belts. Before the replacement clean both pulleys from rubber residues.

⚠ A high number of worn belts in a short time is not normal. Please check that the rotor rotates freely without obstacles blocking its movement

- Make sure the knives are still sharp uniformly and that they do not show signs of cracks or excessive wear. In case their replacement is needed, always use original knives supplied by SOVEMA.

- Check the oil level in the gearbox through the oil level plug placed on the side of the gearbox (see fig. 4). In case a refill is needed, unplug the filler plug from the top of the gearbox and proceed with the filling until the oil is visible again through the level plug.

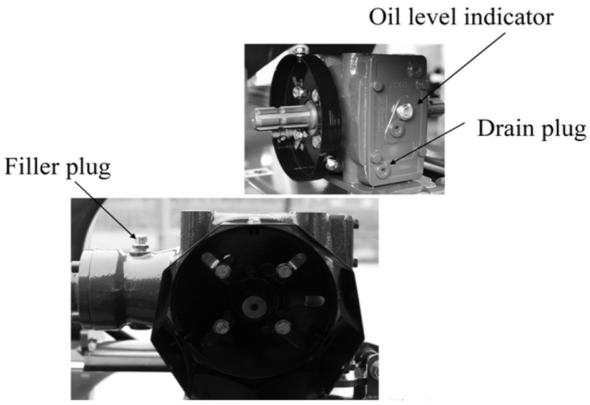

Figure 4

EVERY 50 WORKING HOURS

- Proceed greasing rear roller's lateral supports. Before greasing, clean the grease nipple correctly to avoid the entrance of dirt, grass and mud. Use lithium-based grease with NLGI grade of 2

- For versions equipped with rear wheels, lubricate the wheel's articulated supports. Before lubricating, clean the grease nipple correctly to avoid the entrance of dirt, grass and mud. Use lithium-based grease with NLGI grade of 2

FIRST 100 WORKING HOURS

- When the implement has done its first 100 hours, change the oil from the gearbox. To proceed, remove the plug located under the box, place a container underneath the drain hole, drain all of oil through the discharging hole, then fill in with new oil through the filler hole. This substitution is necessary because the gears are new and so are subject to quicker worn. Use ISO VG 220 synthetic oil only. For the disposal of oil, refer to "7 - DISPOSAL & RECYCLING" section.

EVERY 300 WORKING HOURS

- Completely change the oil in the gearbox proceeding as described above. Use ISO VG 320 mineral oil only. For the disposal of oil, refer to "7 - DISPOSAL & RECYCLING" section

HYDRAULIC SYSTEM

Hydraulic hoses must be replaced when cracks or sign of deterioration are visible

Work on hydraulic system must only be performed if the hydraulic system is depressurized

If you need to replace missing, wear or damaged parts, please always refer to the *spare parts catalogue* attached to this manual.
The spare parts to be used must meet the technical requirements specified by SOVEMA. This is always ensured with original spare parts.

VI – TOXICOLOGICAL INFORMATIONS

The informations listed on table below concern lubrificants, oil and grease, present in the implement:

	TYPE OF DANGER	PROTECTIVE EQUIPMENT	FIRST CARE
SKIN	Possible irritation after prolonged exposure	Safety gloves or lotion	Wash thoroughly with soap and water
EYES	Possible irritation due to contact	Protective glasses	Rinse with running water
INHALATION	Possible irritation after prolonged exposure	Maintain an oil mist level of 5 mg/m3 between TLV-TWA limits	Expose to fresh air and call medical assistance immediately
INGESTION	Not considered	Not considered	Do not provoke vomiting; call medical assistance immediately

VII – DISPOSAL & RECYCLING

At the end of lifetime, the implement must be demolited. Make sure the implement is unhitched from the tractor. This activity must be carried out by customer.
Before proceeding, it is recommend to wear all personal protective equipment including, besides safety shoes and protective gloves, overalls, goggles and helmet.
Please recover all used oil and dispose it in a proper collecting centre.
Start the demolition dismantling all of plastic or rubber parts (e.g. guards, tires) and eventually all of electric and electronic devices, then, proceed to dismant metal parts.
For completing the demolition please detach and destroy the identification plate of the implement, showing the serial number and CE marking, along with this manual.

Used oil must be properly collected and disposed and must not be dispersed in the environment. According to the regulations in force, oil is considered as a dangerous waste for the environment and as such it must be consigned to appropriate facilities

RECYCLING

Parts made exclusively of plastics, steel or other metals (e.g. aluminium) can be recycled.
Protect the environment by disposing such used parts in appropriate collection facilities.

VIII - WARRANTY

VIII.A - TERMS & CONDITIONS

SOVEMA manufacturer of quality machines, guarantees new SOVEMA implement from the time of delivery to the original purchaser to be free from defects in materials and workmanship if properly set up and operated in accordance with recommendations set forth in SOVEMA operation & maintenance manual. SOVEMA's liability for any defect of accepted goods shall be limited to replacing them, or as SOVEMA shall elect.
The purchaser has to validate the warranty just filling in the form available on SOVEMA website (www.sovema.com) in "PRODUCTS" section, or alternatively, filling in the printed form "WARRANTY REGISTRATION" and forward it to SOVEMA or any SOVEMA dealer.
SOVEMA's obligation shall terminate 12 (twelve) months after the date of purchase of the product by the original purchaser. This warranty cannot be assigned or transferred to anyone unless SOVEMA consent in writing has first been obtained. All warranty claims must be forwarded to SOVEMA or a SOVEMA dealer within 8 (eight) days after occurrence.
The original purchaser will be responsible for costs of:

A) routine maintenance such as lubricating, minor adjustments, etc.

B) transportation of any kind of SOVEMA part to the place where warranty work is performed

This warranty shall not apply to those machine which has been repaired or altered in any way outside the SOVEMA factory which affects its stability or reliability, nor which has been subject to misuse, negligence or accident, nor to those machine that has not been operated in accordance with SOVEMA manual, or operated beyond the company recommended capacity as per machine.
This warranty shall not be applicable to items which are subject to the warranties of their respective manufacturers. Such items would include but would not be limited to pto drive shaft, knives, hydraulic components, bearings, belts, tires and other trade accessories.
This warranty shall not be applicable to items defined as normal wearing items. Such items would include but would not be limited to belts, discs, knives, tines stone guards, tires, slip clutches, pitman shaft, swath sticks, blades or tine holders.
The judgement of SOVEMA in all cases of claims under this warranty shall be final and conclusive and the original purchaser agrees to accept its decisions about all questions as to defects and/or to the exchange of any part or parts.
No Agent, Employee or Representative of SOVEMA has any authority to bind SOVEMA to any affirmation, representation or warranty, concerning its machinery excepts as specifically set forth.
SOVEMA shall not be liable for special or consequential damages of any kind caused by any SOVEMA part.

SOVEMA Srl
Via Olmo 6/8/10
41013 Gaggio di Piano (MODENA) - Italy
PHONE: 0039.059.938585
FAX: 0039.059.938512
E-MAIL: commerciale@sovema.com
WEBSITE: www.sovema.com

VIII.B - WARRANTY REGISTRATION

This warranty will become valid only if this form is completed and signed by both the Purchaser and the Dealer and is returned **within 8 days of purchase date,** otherwise the warranty is not valid.

FILL OUT

- ***TYPE OF IMPLEMENT***: _____
- ***SERIAL NUMBER***: _____
- ***DATE OF PURCHASE***: _____

DEALER	*PURCHASER*
I HEREBY CERTIFY THAT: • The machine has been correctly assembled in accordance with the manufacturers instructions • All screws, nuts, oil level and grease have been checked • All safety guards and warning labels have been placed on the machine • PTO has been matched to tractor and greased. • All other pre-delivery checks have been completed as per operation and maintenance manual • The purchaser was given operation and maintenance manual and instructed in safe and correct usage of machine and on limitation of war-ranty • The machine was tested and operates correctly	I HEREBY ACCEPT THAT: • The machine is correctly assembled • I have received, read and clearly understood the operation and maintenance manual • I have a clear understanding of the warranty limitations • I have a clear understanding of the correct and safe operation of the machine • The machine needs regular maintenance (as in-dicated into operation and maintenance manual) • I have clear understood the capacity of this machine and made aware of its limitations

DEALER	Address	**CUSTOMER**	Address
	Date: Signature:		Date: Signature:

<u>DELIVER TO SOVEMA</u>

SOVEMA Srl
Via Olmo 6/8/10
41013 Gaggio di Piano (MODENA) - Italy
PHONE: 0039.059.938585
FAX: 0039.059.938512
E-MAIL: commerciale@sovema.com
WEBSITE: www.sovema.com

VIII.B - WARRANTY REGISTRATION

This warranty will become valid only if this form is completed and signed by both the Purchaser and the Dealer and is returned **within 8 days of purchase date**, otherwise the warranty is not valid.

FILL OUT

- ***TYPE OF IMPLEMENT***: _____
- ***SERIAL NUMBER***: _____
- ***DATE OF PURCHASE***: _____

DEALER	*PURCHASER*
I HEREBY CERTIFY THAT: • The machine has been correctly assembled in accordance with the manufacturers instructions • All screws, nuts, oil level and grease have been checked • All safety guards and warning labels have been placed on the machine • PTO has been matched to tractor and greased. • All other pre-delivery checks have been completed as per operation and maintenance manual • The purchaser was given operation and maintenance manual and instructed in safe and correct usage of machine and on limitation of war-ranty • The machine was tested and operates correctly	I HEREBY ACCEPT THAT: • The machine is correctly assembled • I have received, read and clearly understood the operation and maintenance manual • I have a clear understanding of the warranty limitations • I have a clear understanding of the correct and safe operation of the machine • The machine needs regular maintenance (as indicated into operation and maintenance manual) • I have clear understood the capacity of this machine and made aware of its limitations

DEALER	Address	**CUSTOMER**	Address
	Date: Signature:		Date: Signature:

CUSTOMER'S COPY

INDEX

A

ADJUSTMENT, SEE PREPARATION FOR WORK .....

C

CE MARKING ..... III.B
CHARACTERISTICS, SEE TECHNICAL DATA .....
CHECKLIST ..... III.A
CLEANING IV

D

DECALS ..... II.A
DECLARATION OF CONFORMITY A1
DISPOSAL VII
DIMENSIONS ..... III.B
DEMOLITION, SEE DISPOSAL .....
DISPOSAL VII

F

FIELD OF USE ..... I.B

G

GENERAL INFORMATIONS I
GEARBOX ..... III.A, V
GREASING V

H

HITCHING ..... III.C

I

ID PLATE ..... III.B

L

LABELS ..... II.A
LIFTING V
LUBRIFICANTS V

M

MAINTENANCE ..... II.B, V

O

OIL, SEE LUBRICANTS .....

P

PICTOGRAMS, SEE LABELS .....
PREPARATION FOR WORK ..... III.IV
PTO DRIVE SHAFT ..... II.B, V

R

RECOMMENDATIONS ..... II.B
RECYCLING VII

S

SAFETY II
SERIAL NUMBER ..... III.B
SPARE PARTS ..... V, A3
SPECIFICATIONS, SEE TECHNICAL DATA .....
SPEED (ROTOR) ..... III.B, III.D
SYMBOLS ..... I.A
STORAGE IV

T

TECHNICAL DATA ..... III.B
TOXICOLOGICAL INFORMATIONS VI
TRANSPORT ..... II.B
TROUBLESHOOTING ..... III.G
TOOLS (ROTOR KNIVES/HAMMERS) ..... III.B

U

UNHITCHING ..... III.VI

USAGE ..... II.B, III.E

W

WARRANTY VIII
WEIGHT ..... III.B

SOVEMA Srl
Via Olmo 6/8/10
41013 Gaggio di Piano (Modena) - ITALY
TEL.: 059.938585
FAX: 059.938512
E-MAIL: commerciale@sovema.com
WEB SITE: http://www.sovema.com

EU DECLARATION OF CONFORMITY

The undersigned company,

SOVEMA Srl

hereby declares that the machine

Model: ……

Serial No.: …… Year: ……

is in compliance with all Essential Health and Safety Requirements of the 2006/42/EC European Directive and subsequent modifications and integrations.
For verification of the compliance of the above mentioned directive, the following technical harmonised standards have been consulted:

UNI EN ISO 4254-1: 2015
UNI EN ISO 4254-8: 2018
UNI EN ISO 4254-10: 2010
UNI EN ISO 4254-12: 2018

.....
Silvio Mayer
Managing Director
SOVEMA Srl

Gaggio di Piano, …..…….

SOVEMA Srl
Via Olmo 6/8/10
41013 Gaggio di Piano (Modena) - ITALY
TEL.: 059.938585
FAX: 059.938512
E-MAIL: commerciale@sovema.com
WEB SITE: http://www.sovema.com

UK DECLARATION OF CONFORMITY

The undersigned company,

SOVEMA Srl

hereby declares that the machine

Model: ……

Serial No.: …… Year: ……

is in compliance with all Essential Health and Safety Requirements of the Supply of Machinery (Safety) Regulations 2008.
For verification of the compliance of the above mentioned regulations, the following technical harmonised standards have been consulted:

BS EN ISO 4254-1: 2015
BS EN ISO 4254-8: 2018
BS EN ISO 4254-10: 2010
BS EN ISO 4254-12: 2018

..……
Silvio Mayer
Managing Director
SOVEMA Srl

Gaggio di Piano, ….……..

SOVEMA PRODUCT RANGE

FIXED ROTARY TILLERS WITH CHAIN OR GEARS DRIVE

- over 100 different models
- for tractors from 20 hp to 130 hp
- working width from 100 cm to 350 cm

SIDE SHIFT ROTARY TILLERS

- 10 different models
- for tractors from 20 hp to 45 hp
- working width from 100 cm to 150 cm

STONE BURIERS

- 5 different models
- for tractors from 35 hp to 90 hp
- working width from 120 cm to 200 cm

ROTARY HARROWS

- 11 different models
- for tractors from 25 hp to 100 hp
- working width from 110 cm to 300 cm

FOLDING ROTARY HARROWS

- 3 different models
- for tractors from 200 hp to 350 hp
- working width from 500 cm to 700 cm

ROTARY DITCHERS (FIXED OR WITH SIDE SHIFT)

- 11 different models
- for tractors from 40 hp to 120 hp
- working depth from 45 cm to 130 cm

FLAIL MOWERS (FIXED OR WITH SIDE SHIFT)

- 42 different models
- for tractors from 15 hp to 100 hp
- working width from 100 cm to 320 cm

REVERSIBLE FLAIL MOWERS

- 6 different models
- for tractors from 50 hp to 110 hp
- working width from 180 cm to 320 cm

FOLDING FLAIL MOWERS

- 3 different models
- for tractors from 100 hp to 300 hp
- working width from 400 cm to 600 cm

SIDE FLAIL MOWERS

- 20 different models
- for tractors from 20 hp to 90 hp
- working width from 120 cm to 240 cm

COLLECTOR MOWER (WITH LOW OR HIGH DISCHARGE)

- 6 different models
- for tractors from 30 hp to 50 hp
- working width from 120 cm to 180 cm

FINISHING MOWER

- 14 different models
- for tractors from 15 hp a 70 hp
- working width from 100 cm to 300 cm

HYDRAULIC FORKLIFT

- 11 different models
- for tractors from 30 hp
- lifting capacity from 1300 kg to 1700 kg

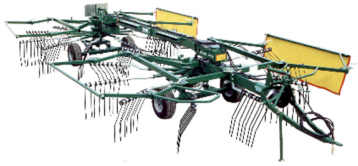

ROTARY RAKES

- 10 different models
- for tractors from 30 hp to 50 hp
- working width from 2,5 m to 8,6 m

V-RAKES

- 7 different models
- for tractors from 30 hp to 55 hp
- working width from 5,3 m to 11 m

HAY TEDDERS

- 10 different models
- for tractors from 15 hp to 50 hp
- working width from 2,5 m to 6,7 m

SICKLE BAR MOWER

- 2 different models
- for tractors from 15 hp to 30 hp
- working width from 180 cm to 210 cm

FERTILIZER SPREADER

- 2 different models
- for tractors from 6 hp
- capacity from 260 l to 450 l

CABS FOR TRACTOR

- over 20 models for 11 several tractor’s brand
- for wheeled or tracked tractors
- available with heater and air-conditioning